FABCO TRANSFER CASE
Brought to you by:
Pro Gear AND TRANSMISSION
FabcoTransferCase.com | 877.776.4600 | 407.872.1901 | parts@eprogear.com

FABCO TC-33 TRANSFER CASE PARTS MANUAL

Fabco
AUTOMOTIVE CORPORATION

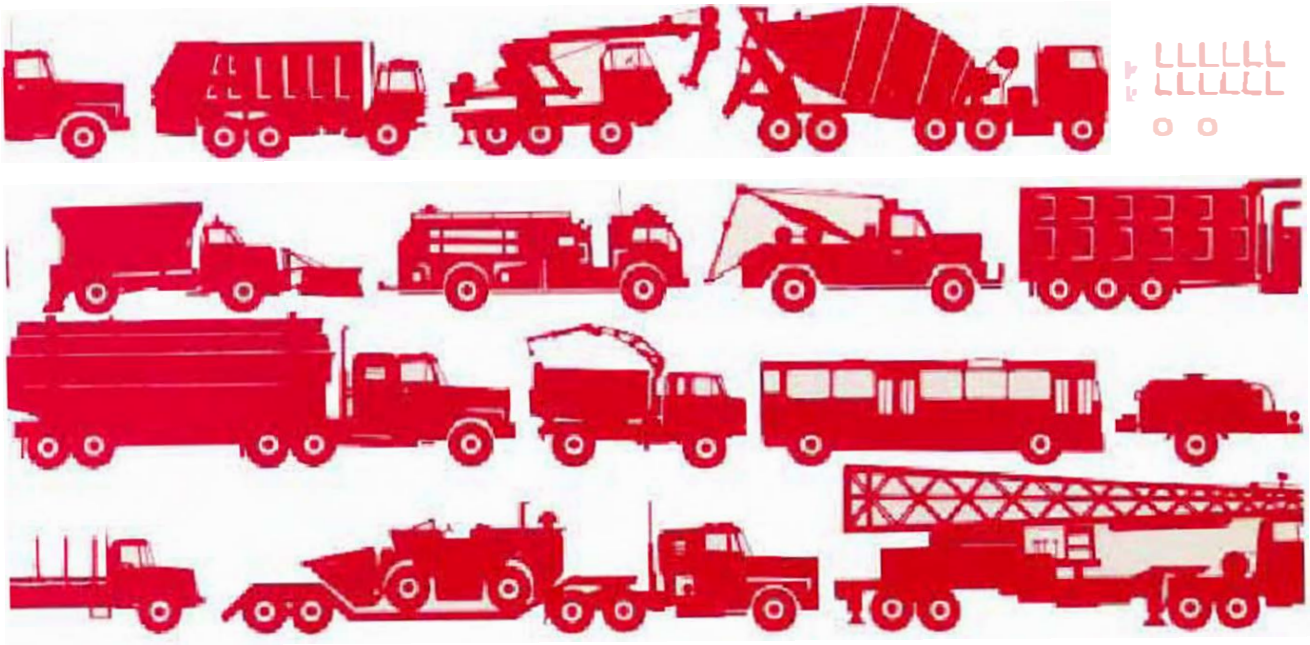

A business unit of tti

Table of Contents

This manual covers single and dual rear output versions of the TC-33 two-speed transfer case with either manual or air shift controls.

Transfer Case Housing and Related Parts 2
Shafts and Related Parts (Dual Rear Output Version) 4
Shafts and Related Parts (Single Rear Output Version) 6
Shift Shafts and Related Parts (Manual Shift) 8
Shift Shafts and Related Parts (Air Shift) 10
Overhaul Kits 11

To Use This Book:

1. Refer to the exploded view which illustrates the needed part.

2. Find the required part in the exploded view and then note the item number or numbers.

3. Locate the item number in the parts list for part number, description, and quantity.

Note:

1. Before ordering parts for a Fabco transfer case, please refer to the Fabco nameplate located on the transfer case housing. Specify model number, serial number, part number, or other information that is on the nameplate when ordering parts.

Part numbers contained in this manual were in effect at the time the manual was approved for printing and are subject to change without notice or liability. Fabco Automotive Corporation reserves the right to change parts at any time.

Transfer Case Housing and Related Parts

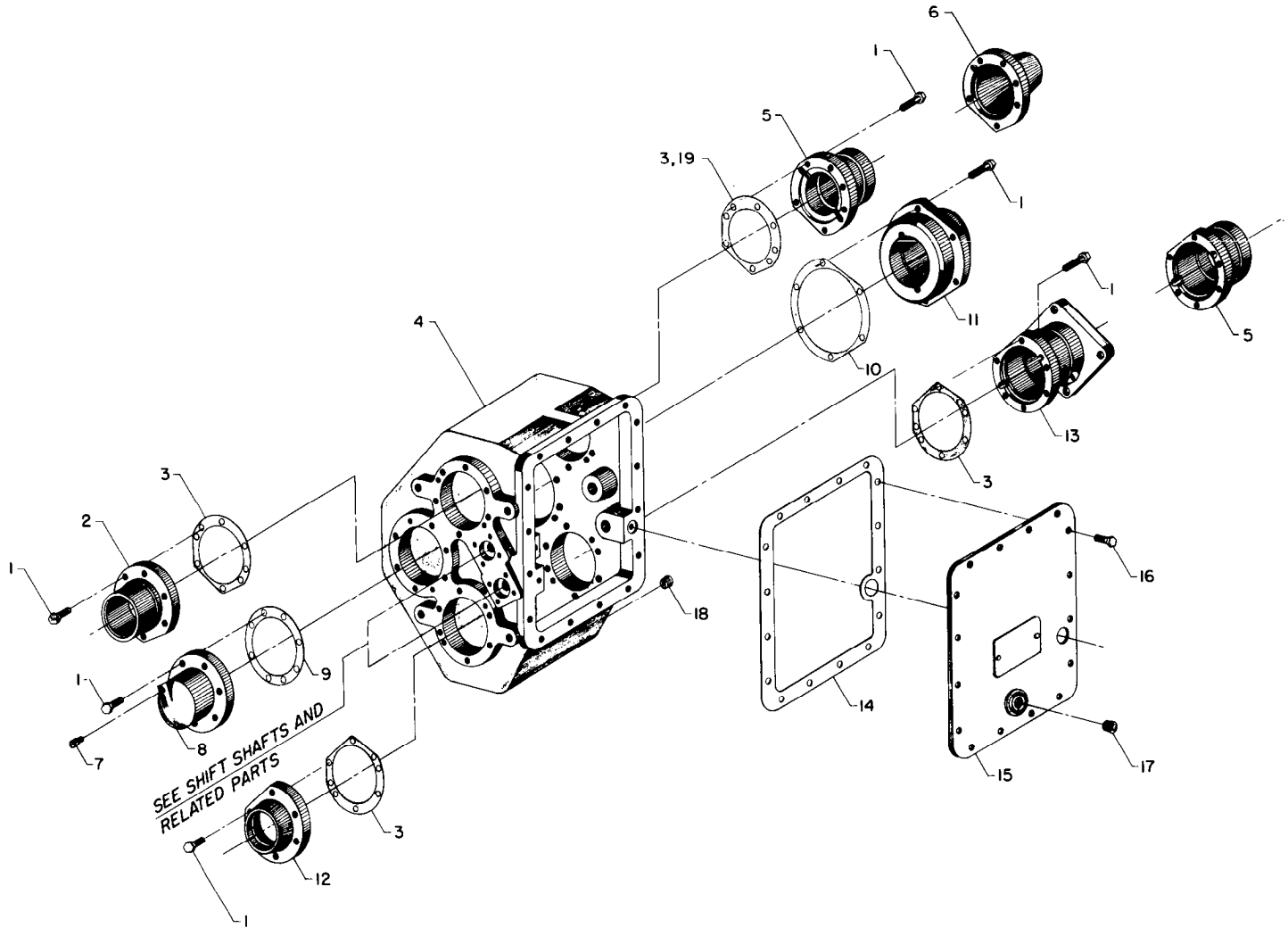

555 057

FabcoTransferCase.com by Pro Gear and Transmission • 906 W. Gore St. Orlando, FL 32805 • 1 (877) 776-4600 / (407) 872-1901

Transfer Case Housing and Related Parts

ITEM	PART NO.	DESCRIPTION	QUANTITY
1	265 238	Bolt, 7/16-14 x 1¾ Grade 5	36
2	237 323	Carrier, Upper Shaft Front Seal	1
3	427 339	Gasket, Seal Carrier	4
4	468 768	Housing, Transfer Case	1
5	237 325	Carrier, Upper and/or Lower Shaft Rear Seal (see note 1)	(As Required)
6	235 375	Cap, Upper Shaft Rear Bearing (see note 3)	(As Required)
7	836 222	Vent, Breather	1
8	235 456	Cap, Intermediate Shaft Front	1
9	427 338	Gasket, Intermediate Shaft Front Cap	1
10	427 342	Gasket, Intermediate Shaft Rear Cap	1
11	235 447	Cap, Intermediate Shaft Rear	1
12	237 394	Carrier, Lower Shaft Seal	1
13	273 453	Bracket, Lower Shaft 12 x 4 Brake Mounting (see note 2)	
	237 334	Bracket, Lower Shaft 9 x 3 Brake Mounting (see note 2)	(As Required)
14	427 398	Gasket, Cover Plate	1
15	793 267	Plate, Cover	1
16	2651239	Bolt, 7/16- x 1 Grade 5 With Lockwasher	16
17	758 268	Plug, ¾ Square Head Fill	1
18	758 274	Plug, ¾ Magnetic Drain	1
19	7441322	Shim, Rear Cap (Coral — .031”)	(As Required)
	7442322	Shim, Rear Cap (Pink — 016")	(As Required)
	7443322	Shim, Rear Cap (Blue — .005”)	(As Required)

Notes:

1. Two (2) item 5 required for dual rear output transfer cases. One (1) item 5 required for dual rear output transfer cases with a parking brake assembly.
   One (1) item 5 required for single rear output transfer cases without parking brake.
2. One (1) item 13 required for transfer cases with a parking brake assembly, only.
3. One (1) item 6 required for transfer cases with a single rear output.

FabcoTransferCase.com by Pro Gear and Transmission • 906 W. Gore St. Orlando, FL 32805 • 1 (877) 776-4600 / (407) 872-1901

Shafts and Related Parts (Dual Rear Output)

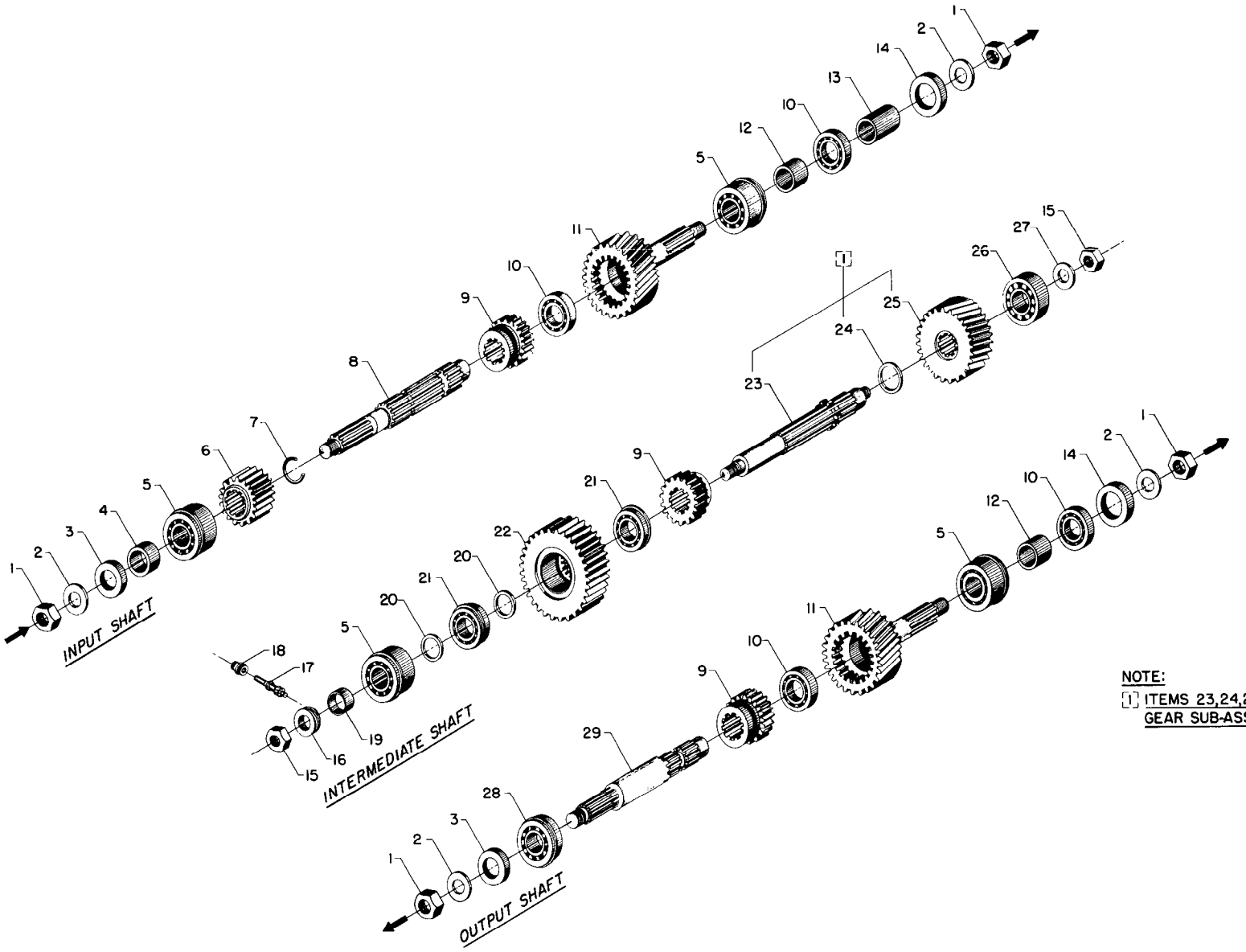

NOTE:
[1] ITEMS 23,24,25 MAYBE PURCHASED AS GEAR SUB-ASSEMBLY INTERMEDIATE SHAFT.

555 058

FabcoTransferCase.com by Pro Gear and Transmission • 906 W. Gore St. Orlando, FL 32805 • 1 (877) 776-4600 / (407) 872-1901

Shafts and Related Parts (Dual Rear Output)

ITEM	PART NO.	DESCRIPTION	QUANTITY
1	688 633	Nut, 1¼-18 Self Locking	4
2	927 229	Washer, 2⅛ O.D. Steel	4
3	732 246	Seal, Input and Front Output	2
4	736 236	Ring, (1.000 Wide) Spacer	1
5	232 245	Bearing, Double Row Ball	4
6	432 478	Gear, (19 Tooth) Underdrive	1
7	736 833	Ring, Retaining	1
8	742 944	Shaft, Input	1
9	432 236	Gear, (20 Tooth) Clutch	3
10	232 237	Bearing, Stem Gear Ball	4
11	432 246	Gear, (35 Tooth) Stem	2
12	736 898	Ring, Bearing Spacer	2
13	882 224	Sleeve, Seal	1
14	732 228	Seal, Rear Output	2
15	688 634	Nut, 1-20 Self Locking	2
16	432 234	Gear, Speedometer Drive	1
17	432 235	Gear, Speedometer Driven	1
18	882 298	Sleeve, Speedometer Driven Gear	1
19	736 229	Ring, (.825 Wide) Speedometer Gear Spacer	1
20	927 224	Washer, (.0598 Wide) Spacer	2
21	232 234	Bearing, Underdrive Gear Ball	2
22	432 477	Gear, (41 Tooth) Underdrive	1
23	742 888	*Shaft, Intermediate	1
24	736 642	*Ring, (.094 Wide) Spacer	1
25	432 238	*Gear, (34 Tooth) Intermediate Shaft Direct Drive	1
26	233 266	Bearing, Roller	1
27	927 237	Washer, 2¼ O.D. Steel	1
28	232 252	Bearing, Output Shaft Ball	1
29	742 672	Shaft, Front Output	1

*Items 23, 24, and 25 may be purchased as Intermediate Shaft Gear Sub-Assembly, part number 4322238.

FabcoTransferCase.com by Pro Gear and Transmission • 906 W. Gore St. Orlando, FL 32805 • 1 (877) 776-4600 / (407) 872-1901

Shafts and Related Parts (Single Rear Output)

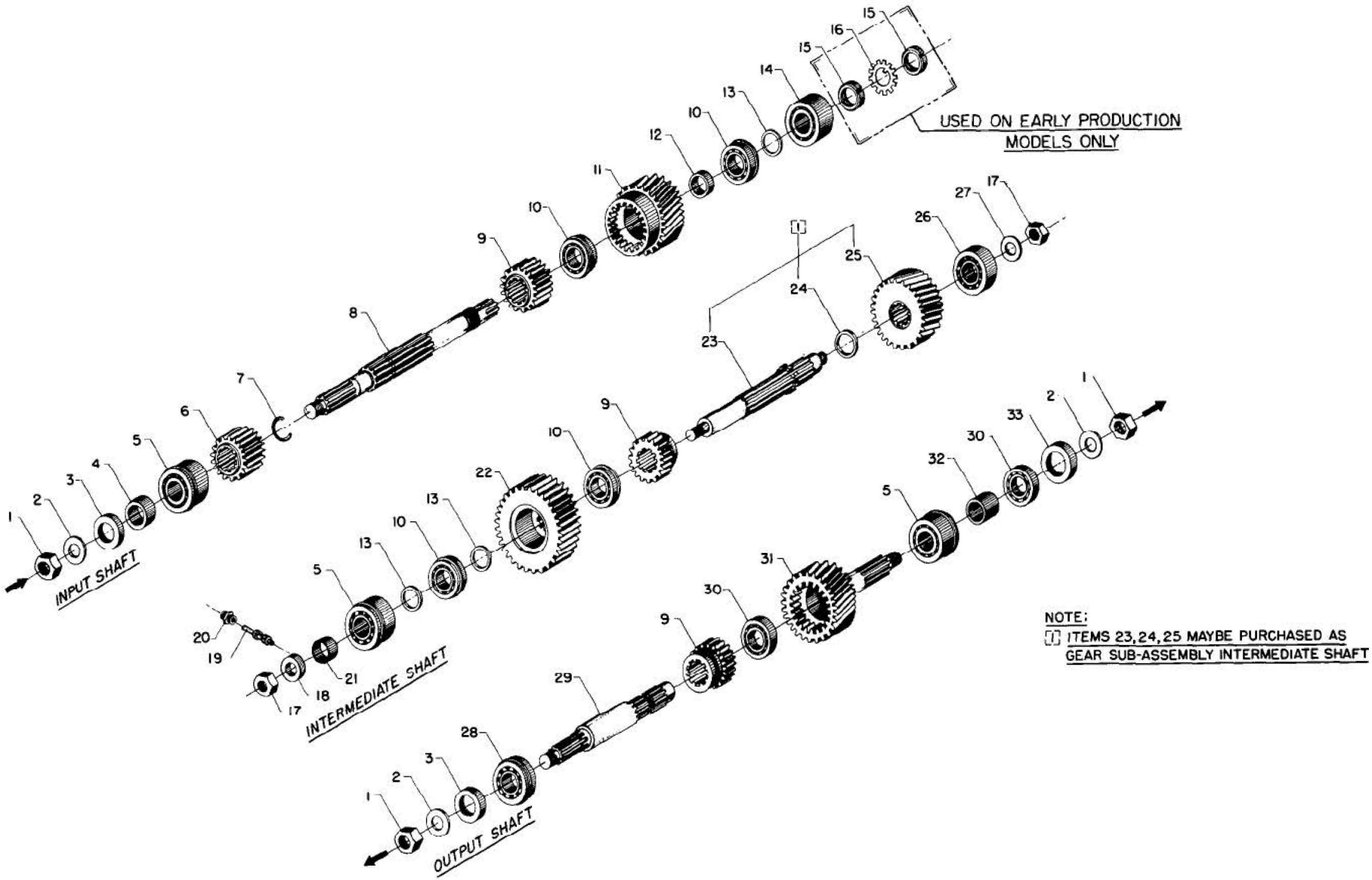

555 060

FabcoTransferCase.com by Pro Gear and Transmission • 906 W. Gore St. Orlando, FL 32805 • 1 (877) 776-4600 / (407) 872-1901

Shafts and Related Parts (Single Rear Output)

ITEM	PART NO.	DESCRIPTION	QUANTITY
1	688 633	Nut, 1¼-18 Self Locking	3
2	927 229	Washer, 2⅛ O.D. Steel	3
3	732 246	Seal, Input and Front Output	2
4	736 236	Ring, (1.00 Wide) Spacer	1
5	232 245	Bearing, Double Row Ball	3
6	432 478	Gear, (19 Tooth) Underdrive	1
7	736 833	Ring, Retaining	1
8	742 887	**Shaft, Input (used with bearing locknut equipped shafts)	1
	769 235	Shaft, Input	
9	432 236	Gear, (20 Tooth) Clutch	3
10	232 234	Bearing, Ball	4
11	432 237	Gear, (35 Tooth) Direct Drive	1
12	736 235	Ring, (.696 Wide) Spacer	1
13	927 224	Washer, (.059 Wide) Spacer	3
14	232 238	Bearing, Upper Shaft Rear Ball	1
15	688 223	**Nut, Bearing Retaining	2
16	927 228	*Washer, Bearing Lock	1
17	688 634	Nut, 1-20 Self Locking	2
18	432 234	Gear, Speedometer Drive	1
19	432 235	Gear, Speedometer Driven	1
20	882 298	Sleeve, Speedometer Driven Gear	1
21	736 229	Ring, (.825 Wide) Speedometer Gear Spacer	1
22	423 477	Gear, (41 Tooth) Underdrive	1
23	742 888	*Shaft, Intermediate	1
24	736 642	*Ring, (.094 Wide) Spacer	1
25	432 238	*Gear, (34 Tooth) Intermediate	1
26	233 266	Bearing, Roller	1
27	927 237	Washer, 2¼ O.D. Steel	1
28	232 252	Bearing, Output Shaft Ball	1
29	742 672	Shaft, Front Output	1
30	232 237	Bearing, Stem Gear Ball	2
31	432 246	Gear, (35 Tooth) Stem	1
32	736 898	Ring, Bearing Spacer	1
33	732 228	Seal, Rear Output	1

Notes:

*Items 23, 24, and 25 may be purchased as Intermediate Shaft Gear Sub-Assembly part number 4322238.

**Used on early production transfer cases.

FabcoTransferCase.com by Pro Gear and Transmission • 906 W. Gore St. Orlando, FL 32805 • 1 (877) 776-4600 / (407) 872-1901

Shift Shafts and Related Parts (Manual Shift)

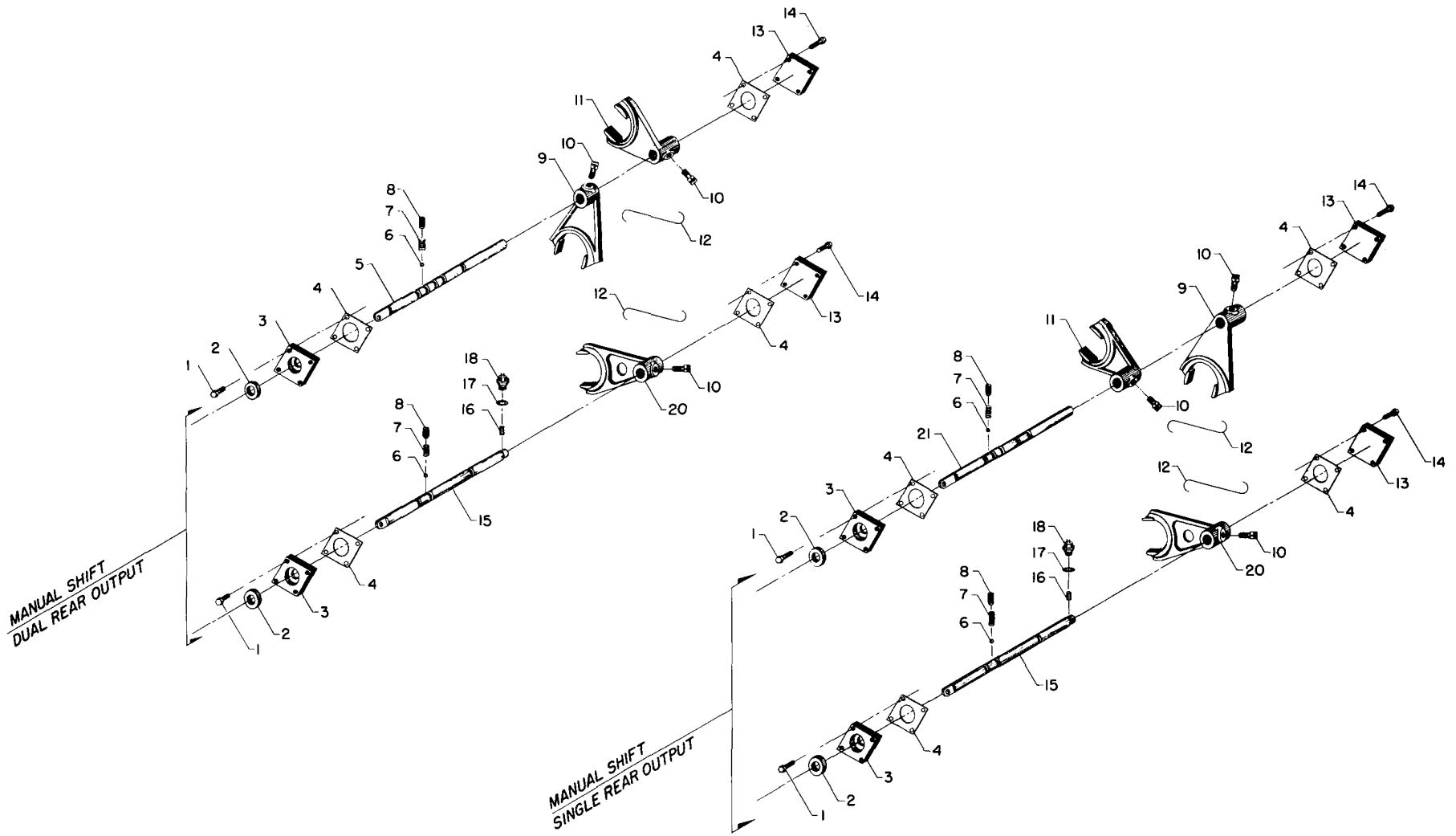

FabcoTransferCase.com by Pro Gear and Transmission • 906 W. Gore St. Orlando, FL 32805 • 1 (877) 776-4600 / (407) 872-1901

Shift Shafts and Related Parts (Manual Shift)

ITEM	PART NO.	DESCRIPTION	QUANTITY
1	265 366	Bolt, ¼-20 x 1	8
2	732 357	Seal	2
3	237 383	Carrier, Seal	2
4	427 399	Gasket, Shift Shaft	4
5	742 955	Shaft, H-N-U Shift (Dual Rear Output)	1
6	225 222	Ball, ⅜ Diameter	2
7	777 225	Spring, Detent	2
8	724 585	Set Screw, 7/16-20 x 7/16	2
9	367 262	Fork, Shift	1
10	724 222	Screw, Set	3
11	367 259	Fork, Shift	1
12	947 223	Wire, 18 Ga. (.048) x 5½ Lock	2
13	235 372	Cap, Shift Shaft	2
14	265 343	Bolt, ¼-26 x ½	8
15	742 947	Shaft, Front Drive Shift	1
16	746 678	Plunger	1
17	927 427	Washer, Copper	1
18	798 245	Switch, Indicator Light	1
19	—	(Not Used)	
20	367 264	Fork, Front Drive Shift	1
21	742 945	Shaft, H-N-U Shift (Single Rear Output)	1

FabcoTransferCase.com by Pro Gear and Transmission • 906 W. Gore St. Orlando, FL 32805 • 1 (877) 776-4600 / (407) 872-1901

Shift Shafts and Related Parts (Air Shift)

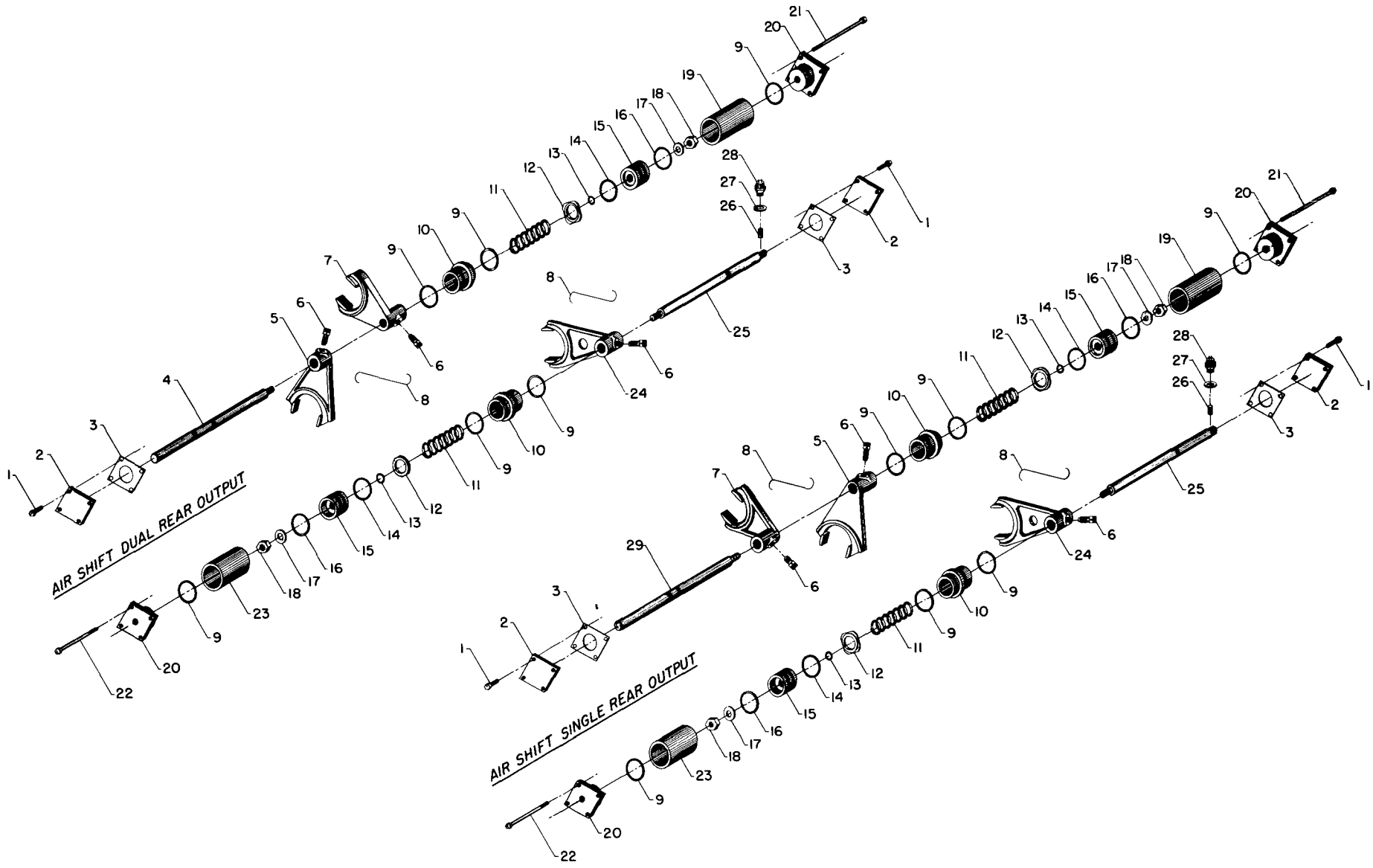

555 061

FabcoTransferCase.com by Pro Gear and Transmission • 906 W. Gore St. Orlando, FL 32805 • 1 (877) 776-4600 / (407) 872-1901

Shift Shafts and Related Parts (Air Shift)

ITEM	PART NO.	DESCRIPTION	QUANTITY
1	265 366	Bolt, ¼-20 x 1	8
2	235 372	Cap, Shift Shaft	2
3	427 399	Gasket, Shift Shaft	2
4	742 943	Shaft, H-N-U Shift (Dual Rear Output)	1
5	367 262	Fork, Shift	1
6	724 222	Screw, Set	3
7	367 259	Fork, Shift	1
8	947 223	Wire, 18 Ga. (.048) x 5½ Lock	2
9	675 224	O-Ring (1¾ I.D.)	6
10	883 479	Tube, Shift Cylinder Adapter	2
11	777 485	Spring, Shift Shaft	2
12	736 747	Ring, Stop	2
13	782 288	O-Ring, Piston Seal	2
14	339 223	Wiper, Felt	2
15	753 232	Piston, Shift	2
16	675 326	O-Ring. (1⅝ I.D.)	2
17	927 643	Washer, Piston Nut	2
18	688 464	Nut, Flexlock	2
19	883 656	Tube, Shift Cylinder (3.81 Long)	1
20	235 352	Cap, Shift Cylinder	2
21	265 893	Bolt, ¼-20 x 5 Grade 5	4
22	265 892	Bolt, ¼-20 x 4 Grade 5	4
23	883 657	Tube, Shift Cylinder (2.94 Long)	1
24	367 264	Fork, Front Drive Shift	1
25	742 878	Shaft, Front Drive Shift	1
26	746 678	Plunger	1
27	927 427	Washer, Copper	1
28	798 245	Switch, Indicator Light	1
29	742 877	Shaft, H-N-U Shift (Single Rear Output)	1

FabcoTransferCase.com by Pro Gear and Transmission • 906 W. Gore St. Orlando, FL 32805 • 1 (877) 776-4600 / (407) 872-1901

Overhaul Kits

PART NO.	DESCRIPTION
427 309	Gasket and Seal Kit (Air Shift — Single Rear Output)
427 311	Gasket and Seal Kit (Air Shift — Dual Rear Output)
427 312	Gasket and Seal Kit (Manual Shift — Single Rear Output)
427 313	Gasket and Seal Kit (Manual Shift — Dual Rear Output)
232 304	Bearing Kit (Dual Rear Output)
232 305	Bearing Kit (Single Rear Output)

IX. Assembly of PTO Unit

(On Cases so Equipped)

Refer to Illustration on Page PM12

1. Put shift fork (Item 59) into housing (Item 61) with the chamfered side of the shift shaft hole toward the two opening ends of the housing, put clutch collar (Item 60) into the housing (with the chamfered end pointing as indicated and into the forked section of the shift fork.

2. Install the shift shaft (Item 49 on Page PM13) or (Item 53 on Page PM14). Install locknut (Item 47 on Page PM13 or PM14). Restrain nut with a box wrench and turn the shaft with an open end wrench.

3. Press bearing cones (Item 64) onto shaft (Item 65). Press seal (Item 69) into bearing carrier (Item 67). Press one cup (Item 63) into carrier.

4. Install shaft (Item 65) with bearing cones into the carrier sub-assembly and install the second bearing cup (Item 63).

5. Install the bearing carrier — shaft assembly onto the housing (Item 61) with the shaft passing into the shift collar. Temporarily bolt the carrier to the housing. With bolts (Item 68) tightened to 15 ft. lbs., measure gap between the parts. Select a shim stack that measures .005 to .010 larger than the gap measurement.

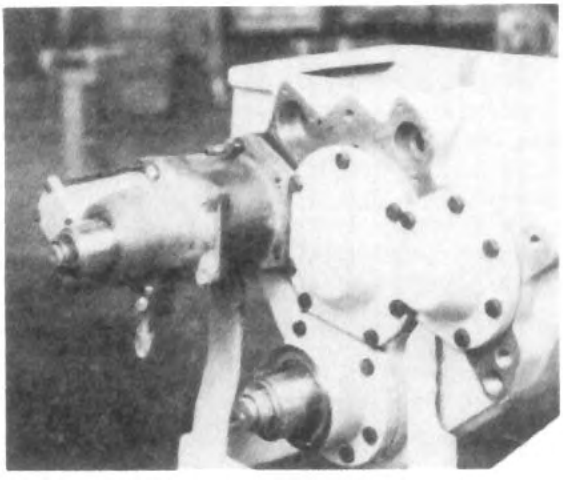

Fig. 37

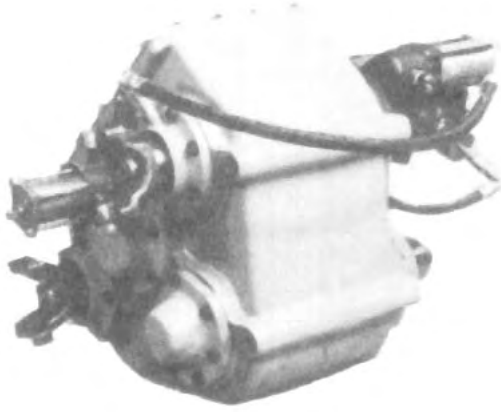

6. Remove bolts (Item 68), install shim, reinstall bolts with Permatex on their threads. Tighten to the specified torque. *Skip to J8 if case is equipped with an air operated PTO shift.*

7. Refer to Page PM14. Install the manual shift linkage as follows:

   a. Oil and install o-ring (Item 3) on seal carrier (Item 52). Install seal (Item 27). Lubricate inside of seal carrier and the seal with Lubriplate or transfer case oil.

   b. Fit seal carrier onto the shift shaft and into the shift opening on the PTO housing. The detent ball opening should be facing in the same general direction as the indicator light switch hole. Install the four bolts (Item 54), tightening to specifications.

   c. Put nut (Item 56) on eye (Item 57). Install (Item 57) onto end of shift shaft (Item 53). Install detent ball (Item 32), detent spring (Item 31) and set screw (Item 30). Tighten set screw until it takes a force of 25-40 lbs. to push the shift shaft out of detent.

   d. Position lever (Item 58) on eye (Item 57) with pin (Item 59) washers (Item 60) and cotter pin installed as illustrated on the oil line and fitting illustration (Page PM15). Install link (Item 55) as illustrated. Check shift action before tightening lock nut (Item 56). The eye should be adjusted as necessary to make the lever angles approximately even in the engaged and disengaged positions. *Skip section J8 and proceed with step J9.*

FabcoTransferCase.com by Pro Gear and Transmission • 903 W. Gore St. Orlando, FL 32805 • 1 (877) 776-4600 / (407) 872-1901

8. Refer to Page PM13, install the Air Operated PTO Shift as follows: Oil o-rings (Item 3), install on adaptor (Item 50). Place adaptor over shift shaft and into the PTO housing with the counterbored end outboard. Place o-ring (Item 11) carefully over the end of the shift shaft. Position spring (Item 51) over the shift shaft and into the adaptor (Item 50). Place bump ring (Item 13) over spring (Item 51). Move shift collar and restrain to make shift shaft project as far as possible. Install piston (Item 9), washer (Item 7) and nut (Item 6). Tighten nut to specified torque. Install felt ring (Item 10) (after soaking in transfer case lubricant) in wide groove of piston. Oil o-ring (Item 8) and install in the outboard groove of the piston. Install cylinder cap. Slip the shift cylinder tube (Item 43)(3⅛″ long) over the piston, onto the adaptor. Fit the shift cylinder cap into place and install the four capscrews that retain the assembly to the PTO unit, tighten to the specified torque.

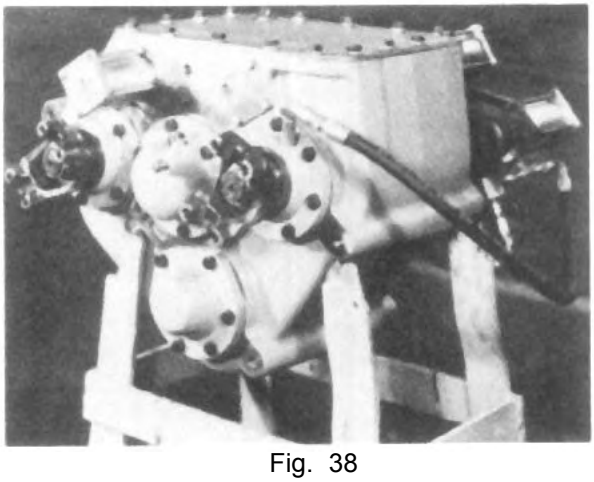

Fig. 38

9. Install the indicator light switch (Item 20) with same washers (Item 21) as were removed during disassembly. Check switch operation with a continuity tester (and air pressure applied to the shift cylinder, if so equipped).

10. Install the blanking sleeve (Item 70) on the PTO output to seal the output shaft section of the PTO, if a yoke is not to be installed immediately.

11. The PTO unit includes an oil pump that consists of items 73 through item 80 on Page PM12. Also refer to Fig. 39. The piston (Item 73) is driven by the eccentric section of shaft (Item 65). A check valve (Item 74) is retained within the piston by a spring type retaining ring (Item 75). This check valve must be installed with the free flow direction and arrow direction pointing toward the PTO shaft. This allows a small portion of the oil pump output to be directed onto the shaft's eccentric surface. Screw nut (Item 77) onto cylinder (Item 79) with nylon portion pointing away from the hexagon section of the cylinder. Coat the piston, check valve and retaining ring assembly with transfer case lubricant. Put the spring (Item 76) into the counterbore of the piston and then put the cylinder over the spring and piston. Push the piston into the cylinder until the end of the cylinder is just even with the port in the side of the cylinder. The piston should move freely without binding. Screw the cylinder into the PTO bearing carrier (See Fig. 39). Rotate the PTO shaft to place the high point

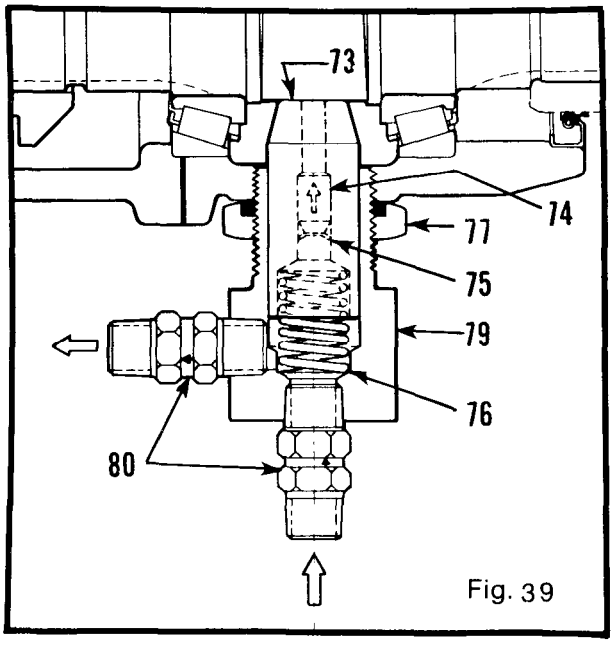

Fig. 39

of the cam under the piston, screw the cylinder in until the outer end of piston is visible short of the cylinder side port. Rotate the PTO shaft to verify that it is indeed on the high point of the cam. Screw the cylinder in until the outer end of the piston is just even with the side port; unscrew cylinder at least one turn, but not more than one and one half turns; tighten lock nut against the PTO bearing carrier with one side port of the cylinder pointing in the direction shown on Page PM15. *Use pipe dope on all pipe threaded fittings.* Screw check valves (Item 80) into place in the cylinder. The inlet check valve should be installed (with the arrow pointing into cylinder) in the end of the cylinder. The outlet valve should have the arrow pointing away from the cylinder and should be in the position shown on Page PM15 to allow the hose (Item 4) to be used to connect the pump to fitting (Item 5) at the front of the case.

8. Refer to section VI G, paragraph 12 for installation of the PTO unit on the transfer case. Also See Fig. 33 and Fig. 37.

9. Refer to Page 2 and Page PM15 for the proper installation of the oil lines. Also see Fig. 1, 2, and 38.

10. Check oil flow out of oil pump upon installation. Refer to Section III B of this manual.

AIR OPERATED H-U AND H-N-U

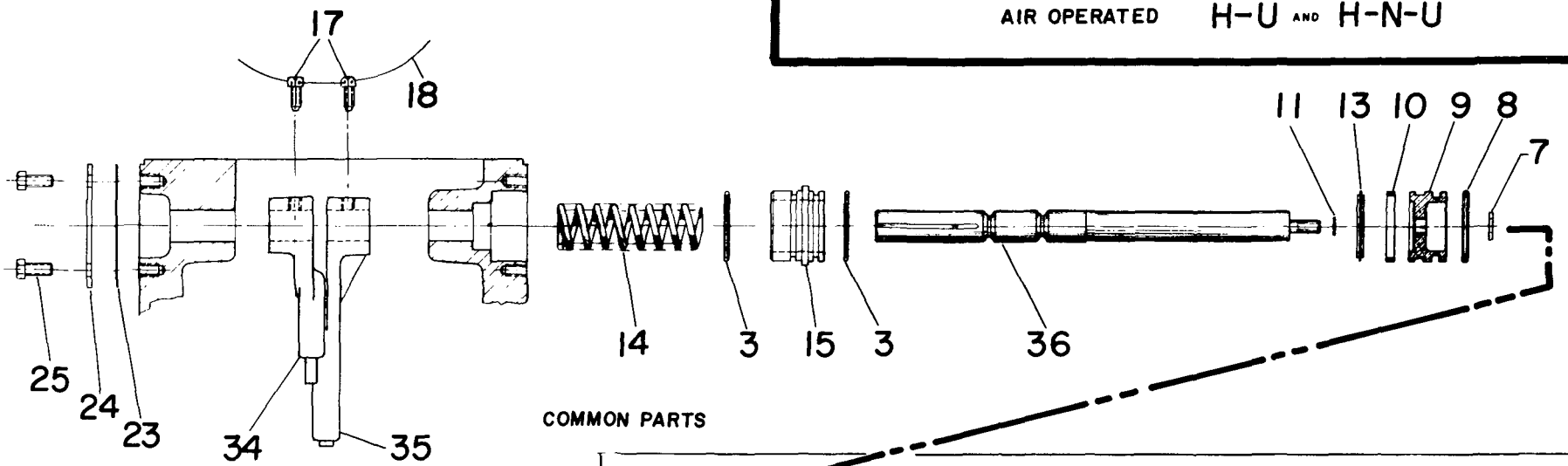

COMMON PARTS

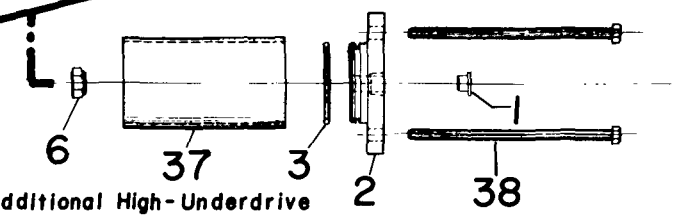

Additional High-Underdrive PARTS USED FOR AIR SHIFT **WITHOUT NEUTRAL**

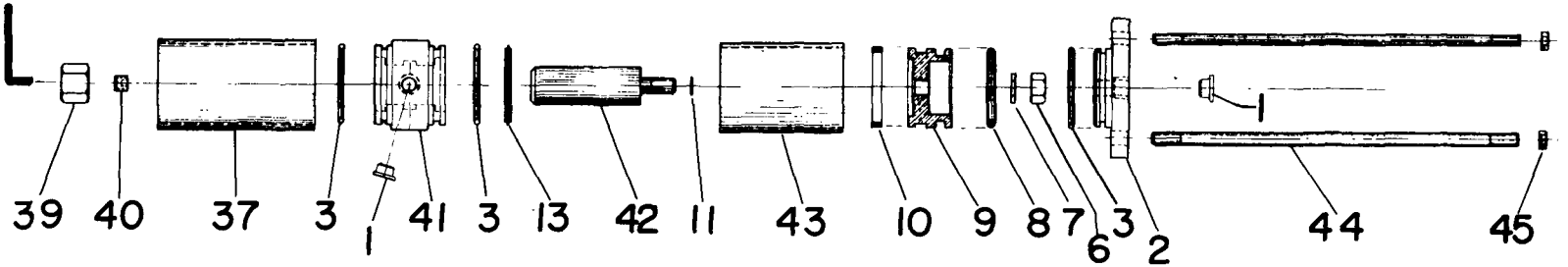

ADDITIONAL HIGH-NEUTRAL-UNDERDRIVE PARTS **WITH NEUTRAL** (Required with PTO and Air Shift)

FabcoTransferCase.com by Pro Gear and Transmission • 906 W. Gore St. Orlando, FL 32805 • 1 (877) 776-4600 / (407) 872-1901

H-N-U Air Shift

ITEM	PART NO.	DESCRIPTION	QUANTITY
1	758 338	Plastic Plug	2
2	235 372	Cap, Air Shift Cyl.	1
3	675 224	O-Ring, Air Shift Cap & Adaptor	5
6	688 464	Nut, Shift Piston	1
7	927 643	Washer, Shift Piston	2
8	675 326	O-Ring, Shift Piston	2
9	753 232	Piston, Shift	2
10	339 223	Felt Ring, Shift Piston	2
11	782 288	O-Ring, Shift Shaft	2
13	736 747	Ring, Nylon Bump	2
14	777 485	Spring, Air Shift Return	1
15	883 479	Adaptor, Air Shift Cyl.	1
17	724 222	Set Screw	2
18	947 223	Lockwire	2
23	427 399	Gasket, Shift Shaft Cap	1
24	235 372	Cap, Shift Shaft	1
25	265 343	Capscrew, ¼-20 x ½	4
34	367 259	Fork, Direct Drive Shift	1
35	367 268	Fork, Under Drive Shift	1
36	742 877	Shaft, H-N-U Air Shift	1
37	883 887 003	Tube, Shift Cyl.	1
39	688 643	Nut, Special	1
40	724 582	Set Screw, ⅜-24 x ¼ Allan Head	1
41	883 893	Adaptor, Piggyback Cyl.	1
42	769 286	Shaft, Piggyback Cyl.	1
43	883 887 007	Tube, Piggyback Cyl. & PTO Cyl.	1
44	788 546 006	Stud, Piggyback Cyl. Mtg.	4
45	688 323	Nut, ¼-28	4

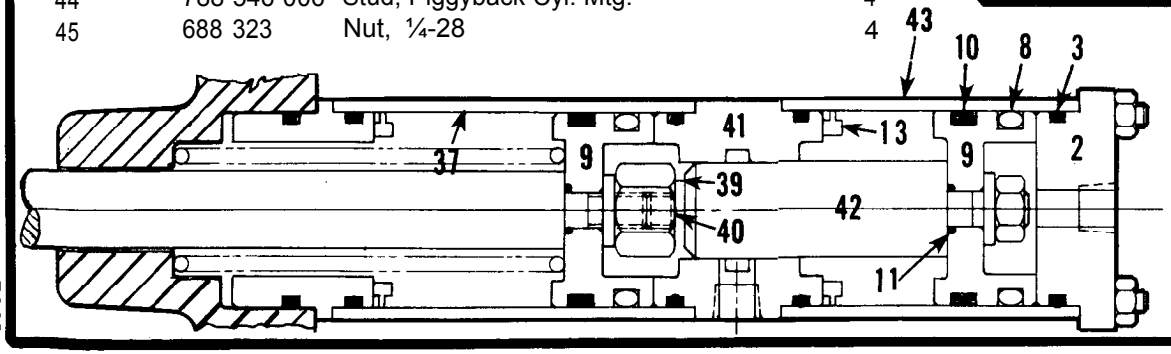

H-U Air Shift

ITEM	PART NO.	DESCRIPTION	QUANTITY
1	758 338	Plastic Plug	1
2	235 372	Cap, Air Shift Cyl.	1
3	675 224	O-Ring, Air Shift Cap & Adaptor	3
6	688 464	Nut, Shift Piston	1
7	927 643	Washer, Shift Piston	1
8	675 326	O-Ring, Shift Piston	1
9	753 232	Piston, Shift	1
10	339 223	Felt Ring, Shift Piston	1
11	782 288	O-Ring, Shift Shaft	1
13	736 747	Ring, Nylon Bump	1
14	777 485	Spring, Air Shift Return	1
15	883 479	Adaptor, Air Shift Cyl.	1
17	724 222	Set Screw	2
18	947 223	Lockwire	2
23	427 399	Gasket, Shift Shaft Cap	1
24	235 372	Cap, Shift Shaft	1
25	265 343	Capscrew ¼-20 x ½	4
34	367 259	Fork, Direct Drive Shift	1
35	367 268	Fork, Under Drive Shift	1
36	742 877	Shaft H-N-U Air Shift	1
37	883 887 003	Tube, Shift Cyl.	1
38	265 982	Capscrew, Air Shift Cyl. ½-20 x 4¾	4

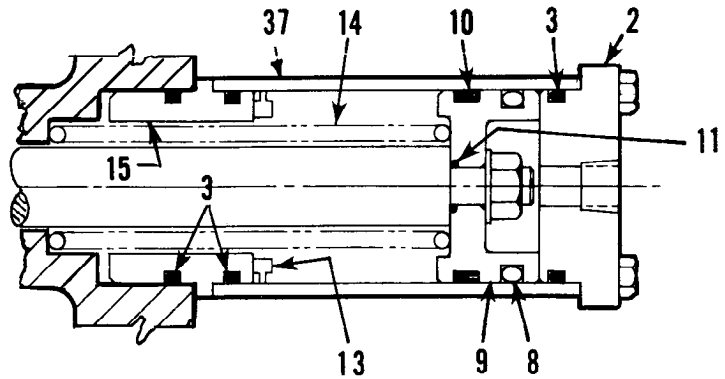

FABCO DIV. KELSEY HAYES

FabcoTransferCase.com by Pro Gear and Transmission • 906 W. Gore St. Orlando, FL 32805 • 1 (877) 776-4600 / (407) 872-1901

The following parts are for PTO equipped cases:

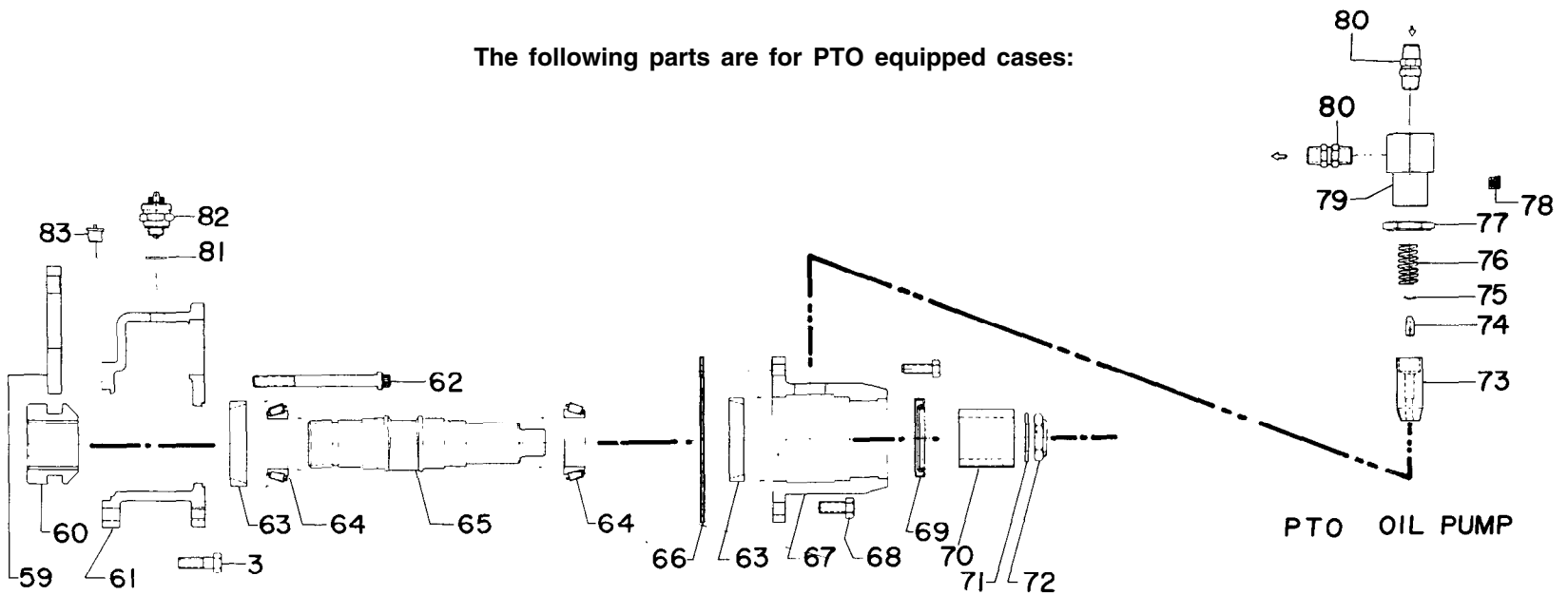

ITEM	PART NO.	DESCRIPTION	QUANTITY
59	367 267	Fork, PTO Shaft	1
60	432 552	Collar, Sliding Clutch	1
61	468 799	Housing, Main PTO	1
62	724 335	Capscrew, 7/16 x 4½ (12) Point	2
63	233 439	Bearing Cup	2
64	233 442	Bearing Cone	2
65	769 237	Shaft, PTO	1
66	7441323	.031 Coral Shim	A/R
	7442323	.016 Pink Shim	A/R
	7443323	.005 Blue Shim	A/R
67	237 425	Carrier, Bearing & Seal	1
68	265 242	Capscrew, ⅜-16 x 1	4
69	732 368	Seal, PTO Output	1
70	883 944	Tube, PTO Output (Temporary)	1
71	927 762	Washer, PTO Output Yoke	1
72	688 634	Nut, PTO Output Yoke	1

ITEM	PART NO.	DESCRIPTION	QUANTITY
73	753 244	Piston, PTO Oil Pump	1
74	825 367	Valve, PTO Piston Check	1
75	762 299	Retaining Ring, PTO Piston Check Valve	1
76	777 535	Spring, PTO Oil Pump	1
77	688 688	Nut, PTO Oil Pump Cyl. Lock & Seal	1
78	758 232	Plug, ¼ NPT PTO Oil Pump Cyl.	1
79	295 389	Cylinder, PTO Oil Pump	1
80	825 737	Valve, PTO Oil Pump In & Out Check	2
81	927 427	Washer, Copper	1
82	798 245	Switch (If Specified)	1
83	758 364	Plug, 9/16-18 Plastic	1

PTO

FabcoTransferCase.com by Pro Gear and Transmission • 906 W. Gore St. Orlando, FL 32805 • 1 (877) 776-4600 / (407) 872-1901

AIR OPERATED PTO SHIFT

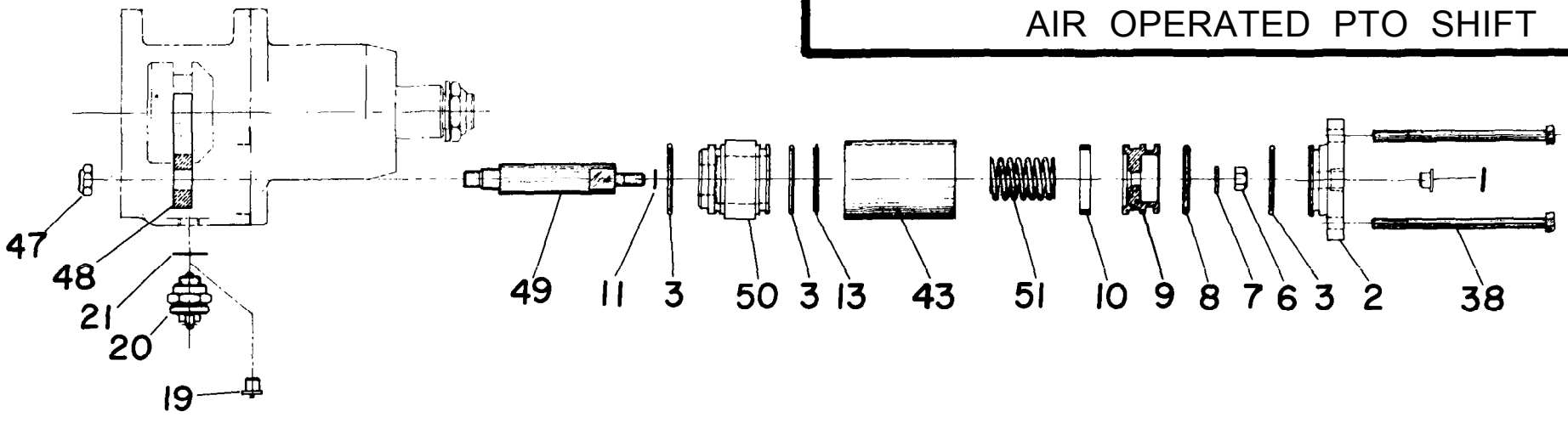

ITEM	PART NO.	DESCRIPTION	QUANTITY
1	758 338	Plastic Plug	1
2	235 372	Cap, Air Shift Cyl.	1
3	675 224	O-Ring, Air Shift Cap & Adaptor	3
6	688 464	Nut, Shift Piston	1
7	927 643	Washer, Shift Piston	1
8	675 326	O-Ring, Shift Piston	1
9	753 232	Piston, Shift	1
10	339 223	Felt Ring, Shift Piston	1
11	782 288	O-Ring, Shift Shaft	1
13	736 747	Ring, Nylon Bump	1
19	758 364	Plastic Plug	1
20	798 245	Switch, Indicator	1
21	927 427	Washer, Copper	1
38	265 982	Capscrew, Air Shift Cyl. ½-20 x 4¾	4
43	883 887 007	Tube, Piggyback Cyl. & PTO Cyl.	1
47	688 684	Nut, PTO Shift Shaft	1
48	367 267	Fork, PTO Shift	1
49	769 236	Shaft, PTO Air Shift	1
50	883 852	Adaptor, PTO Air Shift Cyl.	1
51	777 534	Spring, PTO Air Shift Cyl.	1

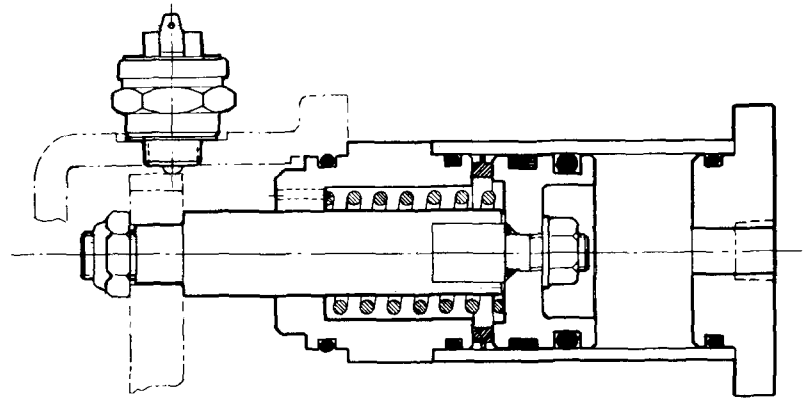

FabcoTransferCase.com by Pro Gear and Transmission • 906 W. Gore St. Orlando, FL 32805 • 1 (877) 776-4600 / (407) 872-1901

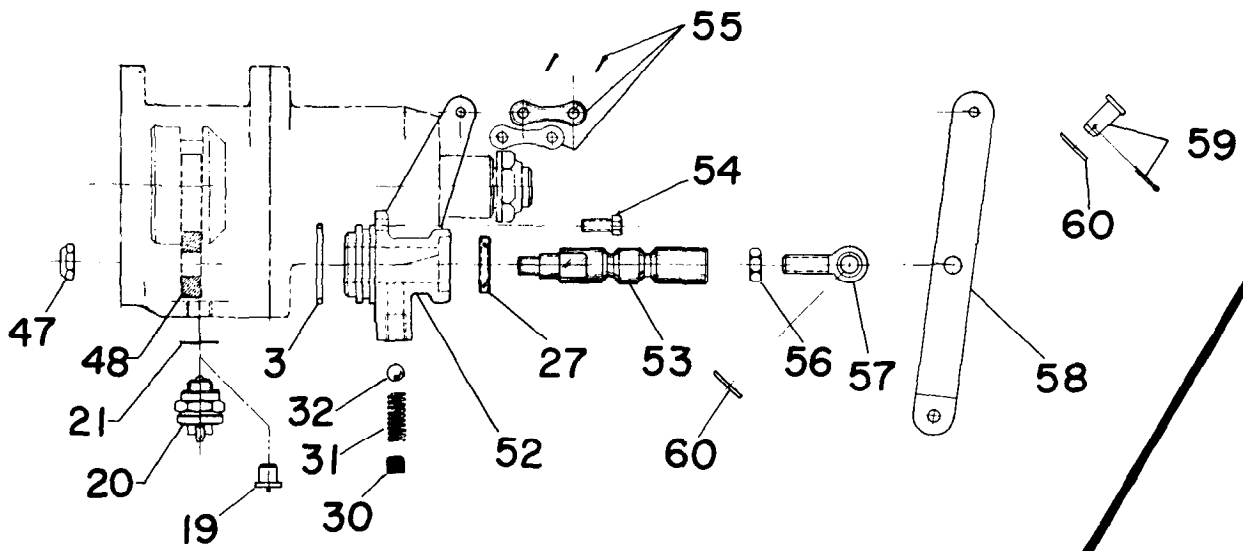

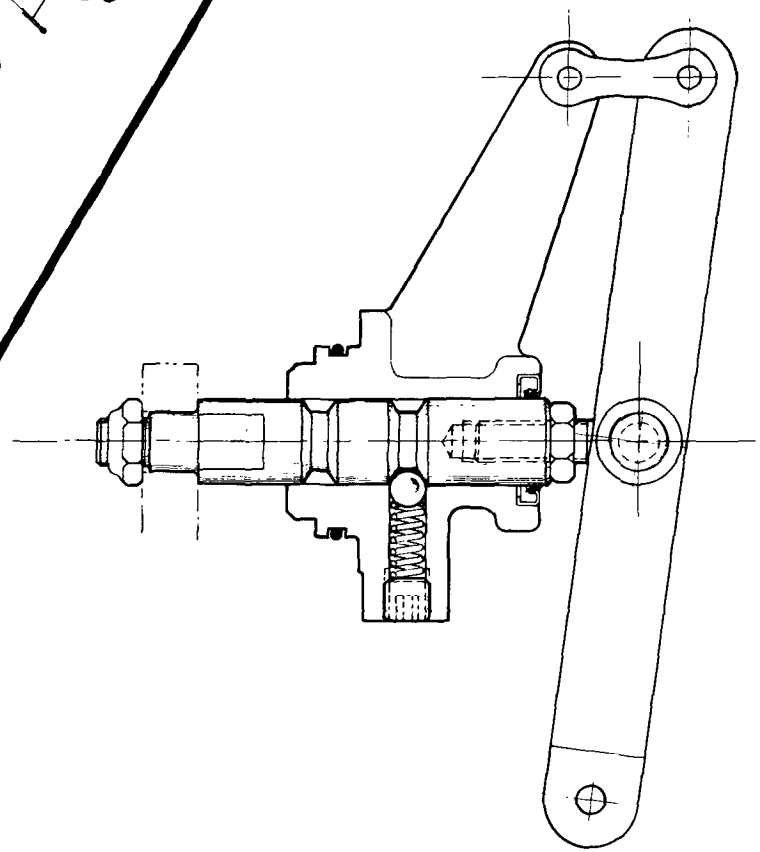

ITEM	PART NO.	DESCRIPTION	QUANTITY
3	675 224	O-Ring, Air Shift Cap & Adaptor	1
19	758 364	Plastic Ring	1
20	798 245	Switch, Indicator	1
21	927 427	Washer, Copper	1
27	732 357	Seal, Shift Shaft	1
30	724 585	Set Screw, Nylock	1
31	777 225	Spring, Detent	1
32	225 222	Ball, Detent	1
47	688 684	Nut, PTO Shift Shaft	1
48	367 267	Fork, PTO Shift	1
52	235 466	Carrier, Shift Shaft & Seal	1
53	769 238	Shaft, PTO Shift-Manual	1
54	265 386	Bolt, ¼-20 x ¾	4
55	246 289	Link, Connecting	1
56	688 237	Nut, 7/16-20 Jam	1
57	393 222	Eye Bolt	1
58	538 476	Lever, PTO Shift	1
59	746 352	Pin, Clevis w/Cotter Pin	1
60	927 347	Washer	2

MANUAL PTO SHIFT

FabcoTransferCase.com by Pro Gear and Transmission • 906 W. Gore St. Orlando, FL 32805 • 1 (877) 776-4600 / (407) 872-1901

Oil Lines & Fittings — PTO

ITEM	PART NO.	DESCRIPTION	QUANTITY
1	357 288	Fitting, ½ MP ⅜ H JIC	1
2	469 794	Hose Assembly, Suction	1
3	357 939	Fitting, ¼ FP ⅜ H JIC	2
4	469 826	Hose Assembly, Pressure	1
5	357 948	Elbow, ¼ MP ⅜ H	1

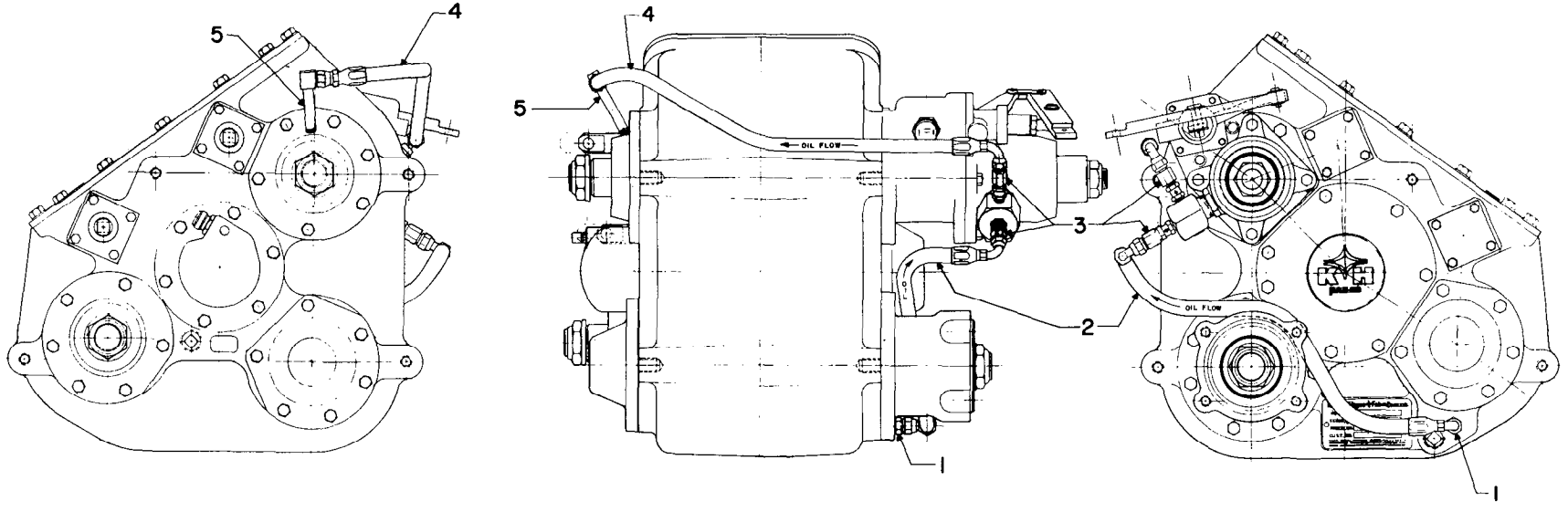

FabcoTransferCase.com by Pro Gear and Transmission • 906 W. Gore St. Orlando, FL 32805 • 1 (877) 776-4600 / (407) 872-1901